WY-700 User's Guide and Programmer's Manual

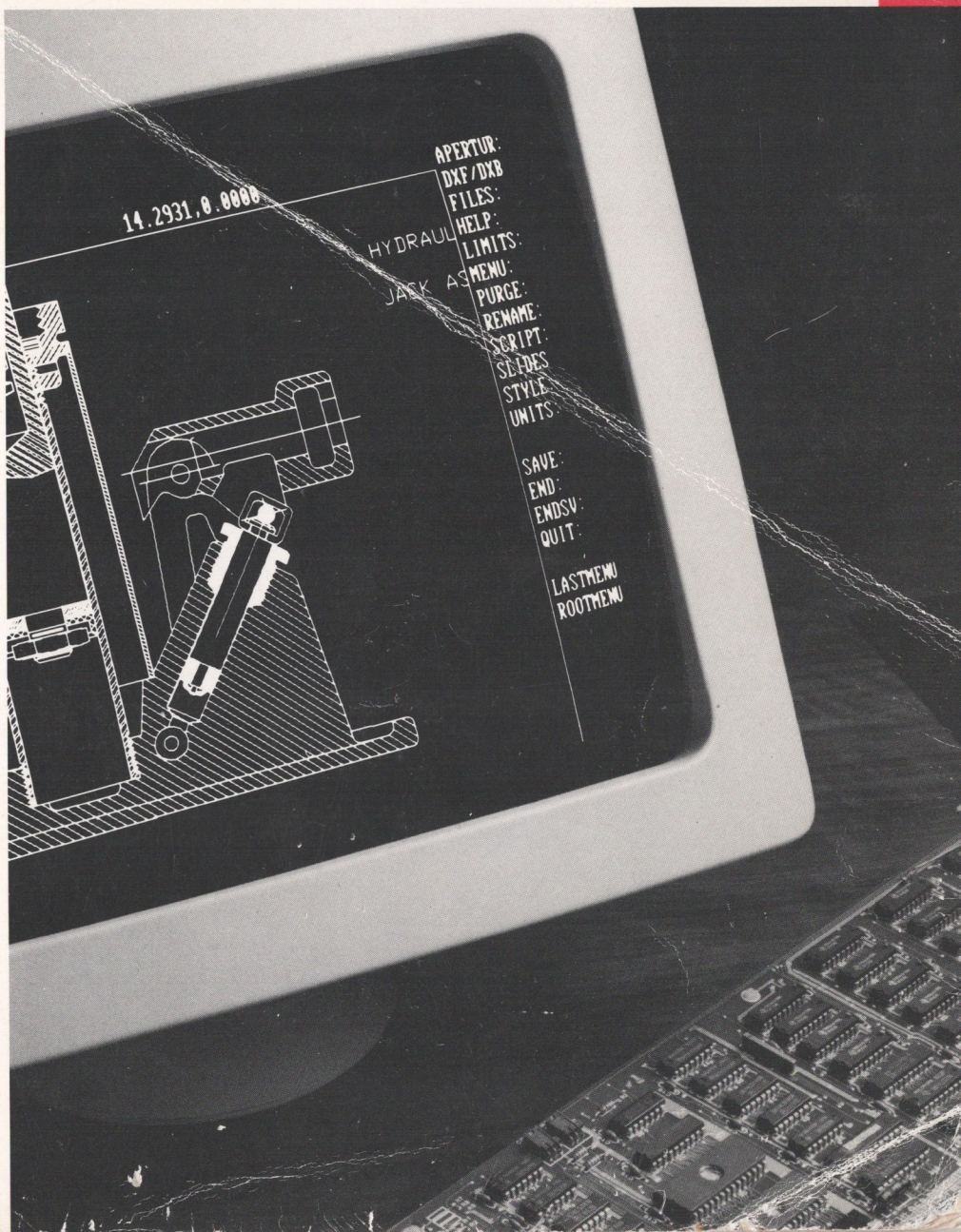

WYSE

Copyright Notice

© 1985 Wyse Technology. All rights reserved.

This manual and the software described in it are copyrighted by Wyse Technology. The software described in this document is furnished under a license agreement. You may not reproduce, transmit, transcribe, store in a retrieval system, or translate into any language or computer language, in any form or by any means, electronic, mechanical, magnetic, optical, chemical, manual, or otherwise, any part of this publication without the express written permission of Wyse Technology. Except for normal backup copies, you may not copy any part of the software provided with this product.

Trademarks

WYSE is a registered trademark of Wyse Technology.

WY-700 is a trademark of Wyse Technology.

WYSEpc is a trademark of Wyse Technology.

IBM PC, IBM PC-AT, and IBM PC/XT are registered trademarks of International Business Machines.

Microsoft is a registered trademark of Microsoft Corporation.

MS is a trademark of Microsoft Corporation.

WordStar is a registered trademark of MicroPro International Corporation.

Lotus 1-2-3 is a trademark of Lotus Development Corporation.

Sidekick is a trademark of Borland International, Inc.

Flight Simulator is a registered trademark of Microsoft Corporation.

Disclaimer

Wyse Technology makes no representations or warranties regarding the contents of this document. We reserve the right to revise this document or make changes to the specifications of the product described within it at any time without notice and without obligation to notify any person of such revision or change.

User's Guide

OVERVIEW

This User's Guide introduces our unique high-resolution **monochrome monitor**, a graphics subsystem that you can install on your IBM PC or PC-compatible computer to display all PC-compatible software--**color and graphics** as well as monochrome!

HOW TO USE THIS MANUAL

Refer to:

- **Chapter 1, "Subsystem Overview,"** for an introduction to the monitor's features and a quick summary of how they work.
- **Chapter 2, "Installation,"** to install the monitor's display adapter card in your computer and to setup your monitor, or in case you need start-up troubleshooting information.
- **Chapter 3, "Applications Programs,"** for information on how to run IBM PC-compatible text and color/graphics applications programs in their respective display modes.
- **Chapter 4, "Utility Programs,"** for an explanation of the subsystem's utility programs, which give you access to the monitor's high-resolution screen capabilities.
- **Appendix A, "Specifications,"** for monitor and display adapter card specifications.
- The **Programmer's Manual** if you want to modify existing application programs, or write new programs to run in the monitor's enhanced high-resolution display modes.

TABLE OF CONTENTS

1 GRAPHICS SUBSYSTEM OVERVIEW

Subsystem Description..... 1-2
Subsystem Features..... 1-3
Enhanced Display Characteristics..... 1-4
Standard IBM PC-Compatible Display Modes..... 1-4
High-Resolution Modes..... 1-6
Summary of Graphics Subsystem Characteristics..... 1-7

2 INSTALLATION

Getting Ready..... 2-2
Preparing the Display Adapter Card..... 2-3
Jumper Settings..... 2-3
Installing the Display Adapter Card..... 2-5
Power-Up Display Mode..... 2-5
Installing the Monitor..... 2-5
Operator Controls..... 2-6
Operating the Monitor..... 2-7
Troubleshooting..... 2-8

3 APPLICATIONS PROGRAMS

Running Applications Programs..... 3-2
Selecting IBM PC-Compatible Display Modes..... 3-2
High-Resolution Modes..... 3-6

4 UTILITY PROGRAMS

Overview..... 4-2
Loading the Utility Programs..... 4-2
Running the Utility Programs..... 4-3
Memory-Resident Programs..... 4-11
Load Commands..... 4-11

APPENDIX A--SPECIFICATIONS..... A-1

INDEX..... I-1

LIST OF TABLES

1-1 User-Selected IBM PC-Compatible Text Modes..... 1-5
1-2 Automatically Selected IBM PC-Compatible Color/Graphics Modes..... 1-5
1-3 Subsystem's High-Resolution Text Modes..... 1-6
1-4 Subsystem's High-Resolution Graphics Modes..... 1-7
1-5 Summary of Graphics Subsystem Characteristics..... 1-8
3-1 Common Applications Program Modes..... 3-6

LIST OF FIGURES

2-1 Jumper Locations on Display Adapter Card..... 2-4
2-2 Monitor Installation..... 2-6
2-3 Operator Controls..... 2-7
2-5 Checking the Fuse..... 2-9

1 GRAPHICS SUBSYSTEM OVERVIEW

Subsystem Description 1-2

Subsystem Features 1-3

Enhanced Display Characteristics..... 1-4

Standard IBM PC-Compatible Display Modes..... 1-4
IBM PC-Compatible Text Modes..... 1-4
IBM PC-Compatible Color/Graphics Modes..... 1-5

High-Resolution Modes..... 1-6
High-Resolution Text Modes..... 1-6
High-Resolution Graphics Modes..... 1-7

Summary of Graphics Subsystem Characteristics..... 1-7

SUBSYSTEM DESCRIPTION

This extraordinary monochrome monitor, together with its display adapter card and utility programs, is a **graphics subsystem.** This subsystem is unique because it allows you to run **both** IBM PC-compatible Monochrome and Color/Graphics Adapter (CGA) programs (converted from 16 colors into four shades of gray), as well as special high-resolution graphics applications, on a monochrome display.

The graphics subsystem can be installed in your IBM PC, PC/XT, PC-AT, or PC-compatible computer.

This subsystem's lowest text and graphics resolutions are **superior** to the typical resolutions available on other monitors. This means that not only can you run both IBM text and CGA programs on this monitor, what you see on your display screen is at all times much sharper and clearer than standard displays (see "Enhanced Display Characteristics" in this chapter). This is in addition to the enhanced high-resolution modes this subsystem makes available to you!

The utility programs, included on an accompanying diskette, allow you to take full advantage of the enhanced screen capabilities provided by the display adapter card--particularly the ability to select high-resolution display modes from a range of choices.

See "Summary of Graphics Subsystem Characteristics" at the end of this chapter for a quick-reference table showing the wide variety of display options available to you with this subsystem.

Note--This graphics subsystem does not negatively affect any equipment (such as a printer, modem, or mouse) that plugs into your computer's serial port(s).

SUBSYSTEM FEATURES

With its many advanced features, the graphics subsystem

- Offers five IBM PC-compatible display modes and six high-resolution display modes
- Provides a high-resolution 1280 x 800 pixel display (compared to IBM's CGA standard 640 x 200)
- Allows you to create special high-resolution programs
- Displays (in its **lowest resolution**) crisp, high-resolution alphanumeric characters using character cells of 16 x 32 pixels (compared to IBM's standard 8 x 8)
- Allows an extended 160 column by 50 line alphanumeric display of clearly readable text
- Displays four shades of gray in both text and graphics to emulate IBM Color/Graphics
- Allows many applications programs to switch between text modes and graphics display modes automatically
- Allows a choice of two character fonts (one custom)
- Works with the IBM PC family (XT, AT) and with any IBM PC-compatible computer
- Runs with any operating system, and needs no extra software drivers to run in IBM PC-compatible modes
- Provides a 15-inch white phosphor screen for an exceptional display
- Lets you select the time lapse until the display turns itself off (to prolong the life of the screen's phosphor)

ENHANCED DISPLAY CHARACTERISTICS

The monitors's enhanced display characteristics are the result of an increased number of pixels per graphic dot (for graphics applications) and per character cell (for alphanumeric applications). This enhanced resolution eliminates "jaggies" (the rough edges often found around alphanumeric characters and graphics), allowing more easily seen detail.

Note--The term "graphic dot," as used in this User's Guide, refers to what normally appears as a pixel on typical, standard-resolution displays. For example, the pixel displayed by standard IBM Color/Graphics Adapter programs appears on the high-resolution subsystem display as a tight matrix of eight pixels. This characteristic is a function of the enhanced (1280 x 800 pixel) resolution of the monitor.

Tables 1-1 through 1-4, in the following sections, show the horizontal and vertical configurations of pixels for the character cells and graphic dots used by the monitor.

STANDARD IBM PC-COMPATIBLE DISPLAY MODES

The five display modes listed in Tables 1-1 and 1-2 are the standard modes that run all existing off-the-shelf applications programs written for the IBM PC and for IBM PC-compatible computers. Three of these modes (Table 1-1) are designed to run text. The other two modes (Table 1-2) run a variety of graphics programs, including games such as Flight Simulator.

IBM PC-Compatible Text Modes

Text (alphanumeric) modes are unique in that you can select them from the keyboard using the MS-DOS MODE commands (as described in Chapter 3, "Applications Programs"). Table 1-1 lists the three standard IBM PC-compatible text modes you can select.

Table 1-1 User-Selected IBM PC-Compatible Text Modes

Display Mode	Character Display Format	Color	Pixels/Char. Cell*
IBM Monochrome	80 char. x 25 lines	Black and white	16 x 32
IBM Color/ Graphics	80 char. x 25 lines	4 shades of gray	16 x 32
IBM Color/ Graphics	40 char. x 25 lines	4 shades of gray	32 x 32

*Horizontal x vertical configuration of pixels

IBM PC-Compatible Color/Graphics Modes

Two additional standard IBM PC-compatible Color/Graphic display modes, described in Table 1-2, can be selected **only** automatically by Color/Graphics Adapter applications programs.

Table 1-2 Automatically Selected IBM PC-Compatible Color/Graphics Modes

Display Mode	Graphic Dot* Display Format	Color	Pixels/ Graphic Dot*
IBM Color/ Graphics	320 x 200	4 shades of gray	4 x 4
IBM Color/ Graphics	640 x 200	Black and white	2 x 4

*Horizontal x vertical configuration of pixels and graphic dots

HIGH-RESOLUTION MODES

In addition to the standard modes described in the previous section, you can use--for special applications programs only--six unique high-resolution monochrome display modes. These are listed in Tables 1-3 and 1-4.

Note--To make full use of the high-resolution capabilities of the graphics subsystem with IBM PC-compatible applications programs, you need special drivers that are adapted by a programmer or software vendor. See the Programmer's Manual for complete information.

High-Resolution Text Modes

The subsystem's three high-resolution text (alphanumeric) modes that you can select are listed in Table 1-3.

Note--You can only select text modes (both standard and high-resolution) from the keyboard.

Table 1-3 Subsystem's High-Resolution Text Modes

Display Mode	Character Display Format	Pixels/ Character Cell*
Alphanumeric	80 characters x 50 lines	16 x 16
Alphanumeric	160 characters x 25 lines	8 x 32
Alphanumeric	160 characters x 50 lines	8 x 16

*Horizontal x vertical configuration of pixels

High-Resolution Graphics Modes

Three unique high-resolution modes are also available for special graphics applications. These are listed Table 1-4.

Note--Graphics modes (both standard and high-resolution) are automatically selected by applications programs.

Table 1-4 Subsystem's High-Resolution Graphics Modes

Display Mode	Graphic Dot* Display Format	Color	Pixels/ Graphic Dot*
Graphics	640 x 400	4 shades of gray	2 x 2
Graphics	1280 x 400	Black and white	1 x 2
Graphics	1280 x 800	Black and white	1 x 1

*Horizontal x vertical configuration of pixels and graphic dots

SUMMARY OF GRAPHICS SUBSYSTEM CHARACTERISTICS

This graphics subsystem gives you a far wider variety of options than other monitors on the market. Table 1-5 on pages 1-8 and 1-9 summarizes the choices you have, indicates how to make selections, and shows the results of those selections in terms of both resolution and color.

Note--Chapter 3, "Applications Programs," and Chapter 4, "Utility Programs," give detailed instructions on how to make mode selections with this graphics subsystem.

Table 1-5 Summary of Graphics Subsystem Characteristics

Function	Display Mode	Display Format (Horizontal x Vertical)
Standard Text	IBM Monochrome	80 characters x 25 lines
	IBM Color/Graphics	80 characters x 25 lines
	IBM Color/Graphics	40 characters x 25 lines
High-Resolution Text	Alphanumeric	80 characters x 50 lines
	Alphanumeric	160 characters x 25 lines
	Alphanumeric	160 characters x 50 lines
Standard Color/Graphics	IBM Color/Graphics	320 x 200 graphic dots
	IBM Color/Graphics	640 x 200 graphic dots
High-Resolution Graphics	Graphics	640 x 400 graphic dots
	Graphics	1280 x 400 graphic dots
	Graphics	1280 x 800 graphic dots

*Resolution in pixels per character cell
**Resolution in pixels per graphic dot

Resolution This Subsystem	Standard	Color	Selection Made By
16 x 32*	8 x 8*	Black and white	You with MODE MONO (or SCREEN MONO)
16 x 32*	8 x 8*	4 shades of gray	You with MODE CO80 (or SCREEN CO80)
32 x 32*	9 x 14*	4 shades of gray	You with MODE CO40 (or SCREEN CO40)
16 x 16*		4 shades of gray	You w/SCREEN 80 X 50
8 x 32*		Black and white	You w/SCREEN 160 X 25
8 x 16*		Black and white	You w/SCREEN 160 X 50
4 x 4**		4 shades of gray	Program
2 x 4**		Black and white	Program
2 x 2**		4 shades of gray	Program
1 x 2**		Black and white	Program
1 x 1**		Black and white	Program

2 INSTALLATION

Getting Ready..... 2-2

Preparing the Display Adapter Card..... 2-3

Jumper Settings..... 2-3

Installing the Display Adapter Card..... 2-5

Power-Up Display Mode..... 2-5

Installing the Monitor..... 2-5

Operator Controls..... 2-6

Operating the Monitor..... 2-7

Troubleshooting..... 2-8

GETTING READY

Instructions in this chapter show you how to

- Install
- Operate
- Troubleshoot

the graphics subsystem monitor and the display adapter. When you unpack the monitor, you should find the items listed below. You'll also need a 1/8-inch flat blade screwdriver to connect the video cable.

- Manual
- Utility diskette
- Monitor
- Power cord
- Video cable
- Display adapter card

PREPARING THE DISPLAY ADAPTER CARD

If this is the **only** monitor and display adapter card that you're connecting to your computer system, you don't need to make any changes to the jumper settings on the adapter card.

Caution--Some computers have built-in display circuitry that emulates a monochrome or color display adapter card. If you have such a computer and are going to connect only this monitor to it, you must disable the built-in display circuitry in your computer. (Refer to your computer manual for instructions.)

JUMPER SETTINGS

If you're adding this new monitor and display adapter card to a computer system that has an existing monitor, change the jumper settings on the new display adapter card (shown in Figure 2-1) as follows:

- If the existing display adapter is monochrome, set the MONO jumper on the new display adapter to the OFF position. Leave the COLOR jumper in the ON position.

- If the existing display adapter is color, set the COLOR jumper on the new display adapter to the OFF position. Leave the MONO jumper in the ON position.

Figure 2-1 Jumper Locations on Display Adapter Card

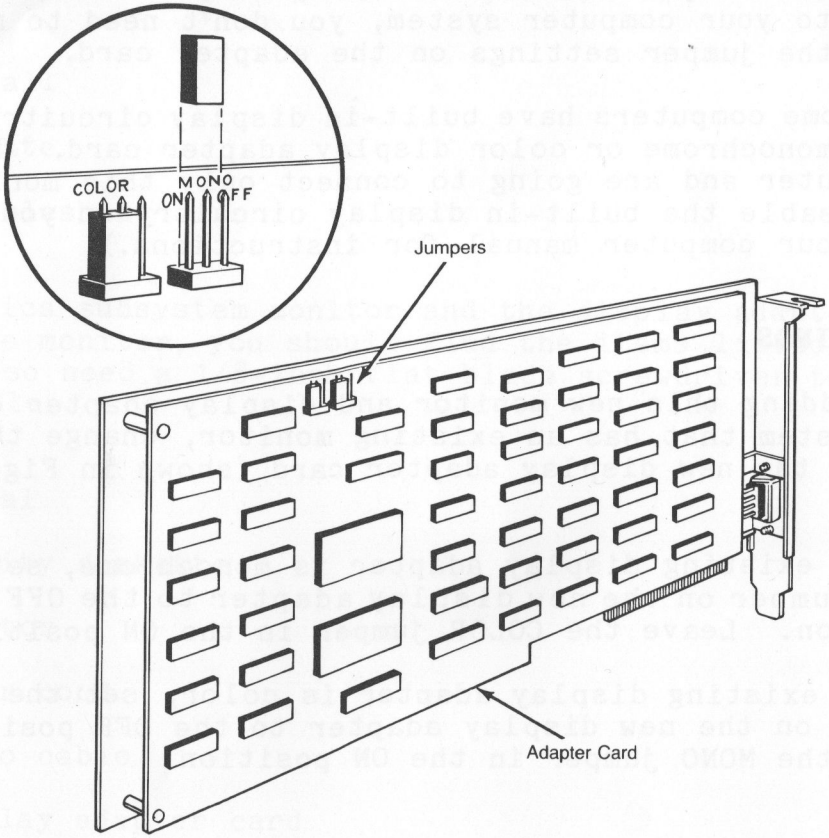

INSTALLING THE DISPLAY ADAPTER CARD

Turn off the computer and unplug it from the wall socket. Install the display adapter card in a full-sized slot in your computer. (Follow the adapter card installation instructions in your computer manual.)

POWER-UP DISPLAY MODE

If your system sets the power-up display mode with switches (as do IBM PCs, PC/XTs, PC-ATs, and most PC-compatibles), set the switches before reassembling your computer. (See your computer manual for information on how to set these switches.)

If you have an IBM PC-AT or compatible, you must also run your computer's SETUP utility to configure the power-up display mode. Run SETUP after reassembling and booting for the first time.

INSTALLING THE MONITOR

Place the monitor on top of or near your computer. Remember to leave at least three inches of clearance above and around the monitor for air circulation and cables. Install the monitor (referring to Figure 2-2).

1. Attach one end of the video cable to the 9-pin port on the rear panel of the monitor. Tighten the screws on both sides of the video cable connector with a screwdriver.

2. Find the 9-pin video port on this display adapter. Attach the free end of the video cable to the video port. Tighten the screws on both sides of the video cable connector.

3. Connect the female end of the power cord to the power receptacle on the monitor. Connect the male end to the power receptacle on the computer.

Figure 2-2 Monitor Installation

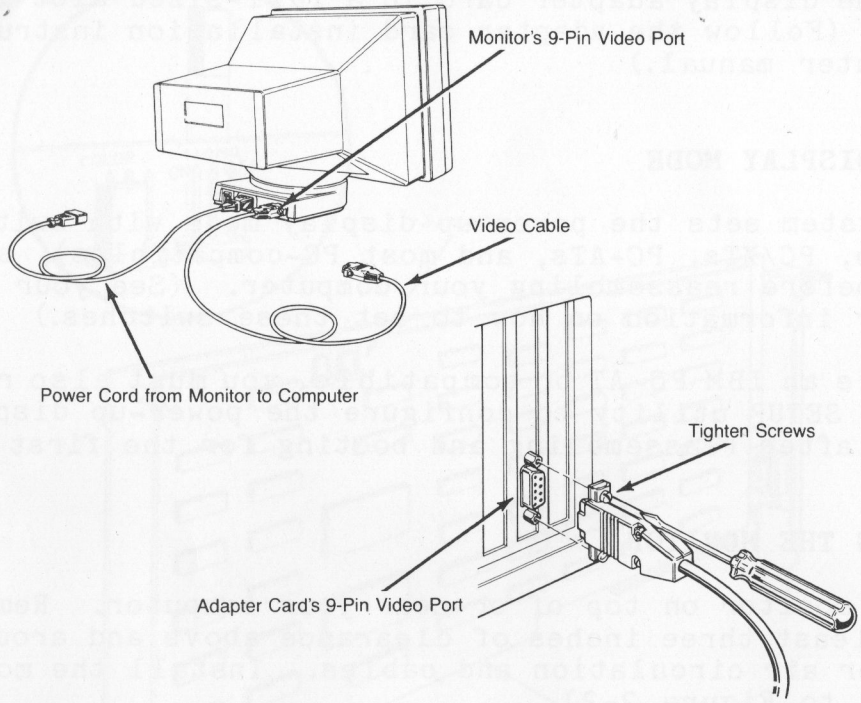

OPERATOR CONTROLS

The monitor has two operator controls (see Figure 2-3):

- The ON/OFF switch is on the monitor's rear panel.
- The BRIGHTNESS thumbwheel, on the lower-right corner of the monitor adjusts the screen intensity.

By tilting and turning the monitor, you can make the viewing angle more comfortable.

Figure 2-3 Operator Controls

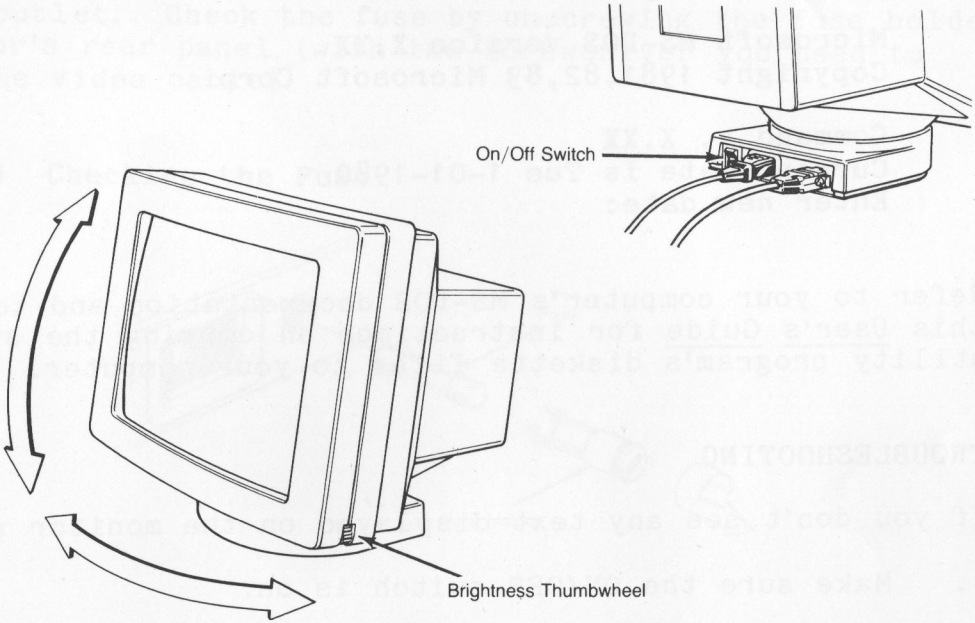

OPERATING THE MONITOR

Now you're ready to operate the monitor.

1. Plug the female end of the computer's AC power cord into its receptacle on the computer.

2. Plug the male end of the computer's AC power cord into a grounded, 3-pronged wall socket.

3. Turn on the monitor.

4. Turn on the computer.

Look for a display on the screen that identifies your computer and operating system. It should look something like this:

Microsoft MS-DOS version X.XX
Copyright 1981,82,83 Microsoft Corp.

Command v. X.XX
Current date is Tue 1-01-1980
Enter new date:

Refer to your computer's MS-DOS documentation and to Chapter 4 of this User's Guide for instructions on copying the subsystem's utility program's diskette files to your computer.

TROUBLESHOOTING

If you don't see any text displayed on the monitor screen,

1. Make sure the ON/OFF switch is on.
2. Turn the BRIGHTNESS thumbwheel clockwise.
3. Check the power cord connections.
4. Check the video cable connections on the monitor and the display adapter.
5. Check your computer's manual to make sure you've installed your computer, adapter card, and operating system correctly.
6. Check switch settings that control video output within your computer, if you can do so without voiding your warranty.
7. If none of the above is the problem, check the fuse (see the next section).

Checking the Fuse

Turn off the computer and monitor and unplug the computer from the wall outlet. Check the fuse by unscrewing the fuse holder on the monitor's rear panel (with the screwdriver you used to install the video cable).

Figure 2-4 Checking the Fuse

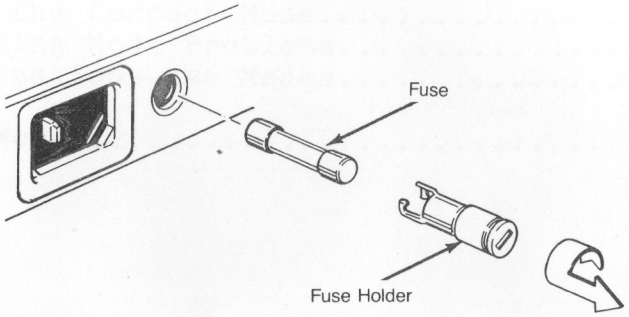

If the small wire in the fuse is blackened or broken, replace it with a fast-blow, 250-volt, 2.0-amp fuse. Put the new fuse in the holder and twist the holder back into the rear panel. Plug in the computer and turn both the computer and monitor back on.

If you still don't see text displayed on the monitor after checking the computer, the monitor, the software installation, and the fuse, call your local dealer.

3 APPLICATIONS PROGRAMS

Running Applications Programs..... 3-2

Selecting IBM PC-Compatible Display Modes..... 3-2
Determining the Correct Mode..... 3-3
Troubleshooting Mode Problems..... 3-4
Common Applications and Modes..... 3-5

High-Resolution Modes..... 3-6

RUNNING APPLICATIONS PROGRAMS

The easiest way to make sure that all of your applications programs work correctly is to install them all for either an IBM Monochrome or Color/Graphics Adapter display.

Make sure that the system is configured to power-up in either monochrome or color/graphics mode (see "Power-Up Display Mode" in Chapter 2).

Note--Typical users will only need to use the MS-DOS MODE commands MONO (for monochrome) and CO80 (for color/graphics).

If you want to run some applications in the monochrome mode, and other applications in the color/graphics mode, use the MODE command to override the power-on setting.

SELECTING IBM PC-COMPATIBLE DISPLAY MODES

You can run all existing IBM Monochrome and Color/Graphics Adapter PC-compatible applications programs in their respective display modes. However, many programs do not set the display mode automatically, so you may have to select the mode.

Note--It is important to remember that accidentally running a program in the wrong mode (causing "garbage" or some other irregularity to appear on the display) **harms nothing.** In fact, you may need to select a display mode through trial and error to find the correct one for your program.

The following items describe the two situations you may encounter when trying to run an applications program for the first time.

- Some applications programs set the display mode automatically and transparently (that is, unnoticed by the user).

- Other programs require you to set the mode (see "Determining the Correct Mode" below).

  Note--Unless you are an experienced user or a programmer, there is only one way you'll know that your current display mode is incorrect: What you see on the screen is obviously wrong.

Determining the Correct Mode

It's not difficult to determine which mode to set if the application doesn't do it automatically. Here are three easy ways:

- The documention for the applications program specifies that a monochrome or color/graphics mode is required. If monochrome is required, enter the MS-DOS MODE command

  MODE MONO

  If color/graphics is required, enter

  MODE CO80

- During the installation of the application, you are asked if you have a monochrome or color/graphics display. If you want monochrome, enter

  MODE MONO

  If you want color/graphics, enter

  MODE CO80

o Trial and error. If the application is text only, enter

MODE MONO

If this display does not look right (or if the application uses graphics), enter

MODE CO80

Note--Although you can also select the correct IBM PC-compatible mode through the SCREEN utility program, normally you would run the utility only to select one of the three high-resolution text modes (available for special applications programs that require special drivers).

Troubleshooting Mode Problems

If you've selected the wrong mode, the screen may show the following symptoms:

Symptom **Screen "looks funny."**
Some characters don't display or display incorrectly.
Characters that should be underlined are not.
The cursor is missing.

Solution The program is probably written for an IBM PC-compatible monochrome display mode, and you have selected a color/graphics display mode. Enter either the MODE MONO (or SCREEN MONO) command and see if the screen looks normal.

Symptom **Screen displays cursor only at the top left of the screen.**

Solution ANSI.SYS is installed and you have selected special modes with the SCREEN utility. Either don't install ANSI.SYS or select only the IBM PC-compatible modes available with the MS-DOS MODE commands.

Symptom **Reverse video fields are not reversed.**
Characters underlined when they shouldn't be.
The cursor appears in the middle of characters.

Solution Enter

```
MODE CO80
```

Symptom **"Garbage" (random characters) appears on the screen.**

Solution The applications may be trying to use graphics, but you have selected monochrome. Enter

```
MODE CO80
```

Common Applications and Modes

Table 1-1 lists two common off-the-shelf applications programs and indicates their respective correct modes.

Note--Many games include graphics and are started by booting directly from the game diskette. Since you cannot enter the MODE command in this situation, the computer should be configured to power-up in the color/graphics mode (see "Power-Up Display Mode" in Chapter 2).

Table 3-1 Common Applications Program Modes

Program	Typical Mode	Comments
WordStar	MODE MONO	MODE CO80 may be required, depending on how the program was installed.
Lotus 1-2-3	MODE CO80	Install Lotus 1-2-3 for the color/graphics mode only.

HIGH-RESOLUTION MODES

To make full use of the high-resolution capabilities of the graphics subsystem with IBM PC-compatible applications programs, you need special drivers. In addition, you can create new applications packages based on the graphics subsystem's enhanced screen capabilities. See the Programmer's Manual for complete information.

4 UTILITY PROGRAMS

Overview..... 4-2

Loading the Utility Programs..... 4-2

Running the Utility Programs..... 4-3
The CLEAR Utility..... 4-3
The SAVER Utility..... 4-4
The FONT Utility..... 4-6
The SCREEN Utility..... 4-8

Memory-Resident Programs..... 4-11

Load Commands..... 4-11

OVERVIEW

On the utility programs diskette that is included in the subsystem's package, you will find four utility programs. Although your system will run IBM PC-compatible software without these utility programs (after you have installed the display adapter card), you need to load the utility programs into your computer in order to take advantage of the advanced features provided by the display adapter card. The utility programs

- Clear the display
- Turn the screen saver feature on or off
- Select the primary or alternate font
- Select the display mode from a range of choices

  Note--Although you can select a display mode with the SCREEN utility, normally you select one of the three standard display modes with the MS-DOS MODE utility commands (MODE MONO, MODE CO40, and MODE CO80).

LOADING THE UTILITY PROGRAMS

First, make a backup copy of the utility program files on a spare diskette. Then, load the programs into your computer by copying all four utility programs into any directory that's convenient (for example, on your hard disk's utility directory, if your computer has a hard disk). When you have done this, you can run the utility programs, whose filenames follow:

CLEAR.EXE	SCREEN.EXE
FONT.EXE	SAVER.EXE

RUNNING THE UTILITY PROGRAMS

This section describes the functions of the graphics subsystem utilities and explains how to run them.

Note--If you make an error in the entry, the subsystem prompts you

Bad command or file name

When this happens, simply retype the command and press the ENTER or RETURN key.

The CLEAR Utility

Purpose The CLEAR utility clears the entire screen, regardless of its line-and-column configuration, whereas the CLS command clears only the first 25 lines and 80 columns. If you have selected a 50-line or 160-column screen, you must run this utility.

Note--CLEAR also returns the cursor to the upper-left corner of the screen and displays the operating system prompt.

Execution Enter (in upper- or lowercase characters)

clear

The system clears the entire screen, homes the cursor, and displays the operating system prompt.

The SAVER Utility

Purpose The SAVER utility is a memory-resident program (see "Memory-Resident Programs" in this chapter). This utility prolongs the life of the screen's phosphor by turning off the display after the computer has been inactive for a specified number of minutes (15 minutes is the default setting).

Caution--Interactions between memory-resident programs can occur. If this happens, only one of the programs can be used.

When SAVER turns off the display, no data is lost. You can restore the display by pressing any key. The SHIFT key is best because it doesn't affect your data.

If you set the SAVER utility to OFF, the screen continues to display data indefinitely.

Note--If you fail to enter a command option, the system displays

Invalid parameter. Type 'SAVER HELP' for help.

The following examples show you how to execute four commands with the SAVER utility.

Execution To display the help screen, enter

saver help

The system displays

SAVER Version 12-02-85

This screen saver utility will extend the life of the High Resolution Display screen. With the screen saver feature on, the display will be turned off after the computer has not been used for a specified number of minutes. To turn the display on again, press the shift key.

Use the following commands:

SAVER HELP	**(display this help message)**
SAVER STATUS	**(display current screen saver status)**
SAVER OFF	**(turn screen saver off)**
SAVER ON	**(turn screen saver on)**
SAVER nnnn.nn	**(turn screen saver on, and set saver time to nnnn.nn minutes)**

Note--The utility load command SAVER LOAD does not appear on the help screen. (See "Load Commands" in this chapter.)

Execution To find out the status of the saver utility, enter

saver status

The system displays

Screen saver is now on.
The display will be turned off after 10 minutes of inactivity.

The other SAVER commands display similar messages.

Execution To set the screen saver to turn off after 12.5 minutes (12 minutes and 30 seconds), enter

saver 12.5

The system displays

Screen saver is now on.
The display will be turned off after 12.5 minutes of inactivity.

Execution To set the screen saver to turn off after 2 minutes, enter

saver 2

The system displays

Screen saver is now on.
The display will be turned off after 2 minutes of inactivity.

The FONT Utility

Purpose The FONT utility selects either the primary font or an alternate font, if one has been created for your system (as explained in the Programmer's Manual). You can select only one font for the screen at any time.

If your system doesn't contain an alternate font, the screen always displays the default font.

The following shows you how to execute three commands with the FONT utility.

Execution To select a font, enter

font or **font help**

The system displays

This font selection utility is for use with the High Resolution Display Adapter. It selects one of two fonts for the alphanumeric display.

Use the following commands:

FONT 0 **(the default font)**
FONT 1 **(the alternate font)**

If you enter

font 0

the system displays

Font 0 selected.

If you enter

font 1

the system displays

Font 1 selected.

The SCREEN Utility

Purpose The SCREEN utility is memory-resident program (see "Memory-Resident Programs" in this chapter). With this utility, you can select the display mode for your application programs, as described in "Standard IBM PC-Compatible Display Modes" in Chapter 1. The following list summarizes some things you should keep in mind when running the SCREEN utility:

- Normally you select one of the three standard display modes with the MS-DOS MODE utility commands (MODE MONO, MODE CO40, and MODE CO80). Although the SCREEN utility program allows you to make the same selection, you would usually run this utility only to select one of the high-resolution text (alphanumeric) modes available for special application programs that require special drivers. (See the Programmer's Manual.)

- IBM PC-compatible programs will run in the high-resolution modes only if adapted by a programmer or software vendor. (See "High-Resolution Modes" in this Chapter 3.)

- Accidentally running a program in the wrong mode (causing "garbage" or some other irregularity to appear on the display) **harms nothing.** In fact, you may need to try display modes through trial and error to find the correct one for your program.

- Nearly all games will automatically select their own display graphic modes. You probably need to select nothing.

Caution--The SCREEN utility will not work with ANSI.SYS installed.

The following examples show you how to execute three commands with the SCREEN utility.

Execution To see what choices are available, enter

screen help

Note--If don't enter a parameter, the system prompts:

Invalid parameter. Type 'SCREEN HELP' for help.

The system displays

SCREEN Version 12-02-85

This program selects a display mode for the High Resolution Display.

These commands display information:

```
SCREEN HELP   (display this help message)
SCREEN STATUS (display currently selected mode)
```

These commands select PC screen modes for standard software:

```
SCREEN MONO   (80 col x 25 lines monochrome mode)
SCREEN CO80   (80 col x 25 lines color/graphics mode)
SCREEN CO40   (40 col x 25 lines color/graphics mode)
```

These commands select high-resolution modes for special software:

```
SCREEN 80 x 25  (80 columns and 25 lines)
SCREEN 80 x 50  (80 columns and 50 lines)
SCREEN 160 x 25 (160 columns and 25 lines)
SCREEN 160 x 50 (160 columns and 50 lines)
SCREEN 25       (25 lines, don't change columns)
SCREEN 50       (50 lines, don't change columns)
SCREEN 80       (80 columns, don't change lines)
SCREEN 160      (160 columns, don't change lines)
```

Note--The utility load command SCREEN LOAD does not appear on the help screen. (See "Load Commands" in this chapter.)

Caution--Interactions between memory-resident programs can occur. If this happens, only one of the programs can be used. (See "Memory-Resident Programs" in this chapter.)

Execution To run an application that's written for a monochrome adapter, enter

screen mono

The system displays

80 x 25 monochrome mode selected.

Execution To run an application program that's written for a color/graphics adapter with 80 characters per line, enter

screen co80

Note--Be careful to distinguish the letter O from the number 0.

The system displays

80 x 25 color/graphics mode selected.

The other options display similar messages.

MEMORY-RESIDENT PROGRAMS

When you enter commands for the CLEAR and FONT utilities, these utilities simply perform their functions one time when you enter the command. In contrast, the SAVER and SCREEN utilities are memory-resident programs, that is, they stay resident in your system, where they perform their tasks continually. (For example, the SAVER utility is always counting seconds and minutes in preparation to turning off the screen display.)

Many programs are memory resident. For example, desktop organizer programs, such as Sidekick, are memory-resident programs. By their nature, however, memory-resident programs sometimes interact and interfere with one another, and problems may arise if you have more than one memory-resident program loaded in your system.

The SAVER and SCREEN utilities will normally avoid unwanted interaction with other memory-resident programs if they are loaded **last** (see "Load Commands" below).

Caution--If your memory-resident programs interact, only one of the programs can be used.

LOAD COMMANDS

Two utility load commands, SAVER LOAD and SCREEN LOAD, do not appear on their respective help screens.

In order to avoid memory-resident interactions problems, load the SAVER and SCREEN utilities **last** into your AUTOEXEC.BAT file, using the SAVER LOAD and SCREEN LOAD commands.

Caution--If your memory-resident programs interact, only one of the programs can be used.

APPENDIX A SPECIFICATIONS

OPERATING MODES

Alphanumeric

Character Sets:	Hardware generated Two sets of 256 characters each Software switchable between sets	
Mode Switching:	Via software	
Modes:	IBM monochrome	80 columns, 25 lines
	IBM color	80 columns, 25 lines 40 columns, 25 lines
	Native	80 columns, 50 lines 160 columns, 25 lines 160 columns, 50 lines
Format:	Character	Screen
	16 x 32 pixels	80 columns x 25 lines
	32 x 32 pixels	40 columns x 25 lines

Graphics

Type:	Bit mapped	
Mode Switching:	Automatic	
Modes:	IBM color	320 x 200 (4 x 4 pixels/graphic dot) 640 x 200 (2 x 4 pixels/graphic dot)
	Native high resolution	640 x 400 (2 x 2 pixels/graphic dot) 1280 x 400 (1 x 2 pixels/graphic dot) 1280 x 800 (1 pixel/graphic dot)
Screen Attributes:	Blink, reverse, underline, normal, high and low intensity	

MONITOR

	Width	Height	Depth
Dimensions:	14.37 in (365mm)	13.58 in (345mm)	11.89 in (302mm)

Weight: Net 24.9 lb (11.3 kg)
Shipping 27.9 lb (12.7 kg)

Movement: Tilt +25 to -6.5 degrees
Swivel ± 125 degrees

CRT

Display: Diagonal 15 in (381mm)
Horizontal 10.1 in (256mm)
Vertical 7.6 in (192mm)

Glass: Dark nonglare

Phosphor:	White (P171)
Horizontal Scan Rate:	32 kHz
Vertical Refresh:	69.4 Hz (interlaced)
Video Bandwidth:	50 MHz

DISPLAY ADAPTER CARD

Type:	Full size, single slot
Memory:	128K dynamic RAM
Connector:	9-pin industry standard
Character Generator:	Two full character sets (256 characters/set)

CABLES	6-foot power cord Video cable

ENVIRONMENTAL REQUIREMENTS

Temperature:	Ambient 10° to 35° C (50° to 95° F) Nonoperating -30° to 60° C (-30° to 140° F)
Humidity:	20% to 80% (noncondensing)
Altitude:	Operating 0 to 10,000 ft Nonoperating 0 to 40,000 ft

POWER

Line Voltage and Frequency:	Standard 110 VAC, 60 Hz Optional 220 VAC, 50 Hz
Power Consumption:	50 watts
Fuse:	2.0 amp, 250 volt, fast blow

REGULATORY APPROVALS	EMI FCC Class A UL CSA

OPTION	WY-1100-30 Pedestal Base

INDEX

A
Adapter card (see Display adapter card)
Alphanumeric display
  character cells, 1-3
  column width, 1-3
  lines, 1-3
Altitude requirements, A-3
ANSI.SYS, 3-5, 4-8
Applications programs
  common, 3-5
  first use, 3-2
  running, 3-2
  setting modes, 3-2

B
Brightness, 2-6, 2-7, 2-8
Built-in display circuitry, 2-3

C
Cables, 2-5, 2-8, A-3
CLEAR utility, 4-3
Computer
  built-in display circuitry, 2-3
  jumper settings, 2-3
  power-up, 2-5
  serial ports, 1-2
  SETUP utility, 2-5
CRT
  display, A-2
  glass, A-2
  horizontal scan rate, A-2
  phosphor, A-2
  specifications, A-2
  vertical refresh, A-2
  video bandwidth, A-2

D
Display adapter card, 2-8
  installation, 2-5
  jumper settings, 2-3
  preparation, 2-3
  specifications, A-3
Display circuitry, 2-3
Display mode
  choosing, 3-3
  for typical users, 3-2
  high-resolution, 1-4
  IBM-PC compatible, 1-5, 1-6
  information, 3-4
  overriding, 3-2

E
Environmental requirements, A-3

F
FONT utility, 4-6
Fonts, 1-3
Frequency, A-4
Fuse, A-4, 2-9

G
Games, 1-4, 3-5
Graphic dot, 1-4
Graphics subsystem
  character sets, A-1
  characteristics summary, 1-7
  description, 1-2
  environmental requirements, A-3
  features, 1-3
  installation, 2-2
  mode switching, A-1, A-2
  operating modes, A-1, A-2
  operation, 2-7
  option, A-4
  power, A-4
  regulatory approvals, A-4
  screen attributes, A-2
  specifications, A-1, A-2
  troubleshooting, 2-8
  unpacking, 2-2
  with games, 3-5
Graphics subsystem display
  compared to standard, 1-2, 1-3
  superior resolution, 1-2, 1-3
Graphics subsystem monitor
  clearance, 2-5
  dimensions, A-2
Graphics subsystem monitor (continued)
  installation, 2-5, 2-6
  movement, A-2
  specifications, A-2
  tilting and turning, 2-6, 2-7
  weight, A-2

H
High-resolution
  color/graphics display, 1-3
  custom packages, 3-6
  display modes, 1-6
  modes, 3-6
  pixels/character cell, 1-4, 1-5, 1-6
  pixels/graphic dot, 1-4, 1-5, 1-6
Humidity requirements, A-3

I
IBM PC
  compatibility, 1-3
  compatible display modes, 1-5, 1-6
  compatible modes, 3-2
Installation, 2-2

J
Jumper settings
  for one monitor, 2-3
  for more than one monitor, 2-3
Jumper location, 2-4

L
Line Voltage, A-4
LOAD commands, 4-5, 4-10, 4-11

M
Memory-resident programs
  interactions, 4-4, 4-10, 4-11
  SAVER utility, 4-4, 4-11
  SCREEN utility, 4-10, 4-11
Mode switching, 1-3
Monochrome display, 1-3
MS-DOS, 2-8
MS-DOS MODE commands, 3-2, 3-3, 4-2, 4-8

O
ON/OFF switch, 2-6, 2-7, 2-8
Operator controls
  brightness thumbwheel, 2-6, 2-7, 2-8
  ON/OFF switch, 2-6, 2-7, 2-8

P
Power
  consumption, A-4
  requirements, A-4
Power cord, 2-5, 2-7, 2-8, A-3
Power-up display mode
  configuring, 2-5
  setting switches, 2-5

R
Regulatory approvals, A-4

S
SAVER LOAD command, 4-5, 4-11
SAVER utility, 1-3, 4-4
Screen attributes, 1-3, A-2
SCREEN LOAD command, 4-10, 4-11
Screen saver (see Utility programs)
SCREEN utility, 3-3, 3-4, 4-8
Switch settings, 2-8

T
Temperature requirements, A-3
Troubleshooting, 2-8, 3-4

U
Utility programs, 1-2, 2-8
  CLEAR, 4-3
  FONT, 4-6
  LOAD commands, 4-11
  loading, 4-2
  overview, 4-2
  running, 4-3
  SAVER, 1-3, 4-4
  SCREEN, 3-3, 3-4, 4-8

Programmer's Manual

OVERVIEW

The graphics subsystem's display adapter emulates IBM monochrome and color/graphics modes, and provides an additional six high-resolution graphics modes of its own. This guide gives you the information you need to write or modify applications programs to emulate the IBM modes or take advantage of the special high-resolution modes.

This guide is a companion to the User's Guide, which tells you how to install the display adapter and issue the subsystem's special commands.

TABLE OF CONTENTS

1 **PROGRAMMING INTRODUCTION**

Display Modes..... 1-2
Compatible Devices..... 1-3
I/O Ports..... 1-4
Display Memory..... 1-4
Pixel Displays..... 1-5

2 **PROGRAMMING NATIVE HIGH-RESOLUTION MODES**

Selecting a Native High-Resolution Graphics Mode..... 2-2
Programming Native B/W 1280 X 800 Mode
or Gray Scale 640 X 800 Mode..... 2-5
Programming Native B/W 1280 X 400 Mode
or Gray Scale 640 X 400 Mode..... 2-7
Programming Native B/W 640 X 400 MODE
or Gray Scale 320 X 400 Mode..... 2-9
Displaying Different Pages..... 2-10

3 **PROGRAMMING IBM MONOCHROME EMULATION MODE**

Selecting This Mode..... 3-2
Writing to CRT Control Port 1..... 3-2
Initializing the 6845 CRT Controller Registers..... 3-4
Programming Display Memory..... 3-5

4 PROGRAMMING IBM COLOR/GRAPHICS EMULATION MODES

Selecting These Modes..... 4-2
Writing to the Mode Control Register..... 4-2
Initializing CRT Controller Registers..... 4-5
Programming Display Memory..... 4-6

5 ACCESSING THE EXTENDED BIOS..... 5-1

6 CUSTOMIZING THE ROM CHARACTER SETS

Standard Character Set..... 6-2
Custom Character Sets..... 6-2

INDEX..... I-1

LIST OF FIGURES

2-1 Native Control Port 3DFH (Write Only) - Native Modes..... 2-3
3-1 CRT Control Port 1 3B8H (Write Only) - Monochrome Emulation..... 3-3
3-2 CRT Status Port 3BAH (Read Only) - Monochrome Emulation..... 3-4
4-1 Mode Control Register 3D8H (Write Only) - Color/Graphics Emulation..... 4-3
4-2 Status Register 3DAH (Read Only) - Color/Graphics Emulation..... 4-4

LIST OF TABLES

1-1 Available Display Modes..... 1-2
1-2 I/O Port Map..... 1-4
1-3 Memory Map..... 1-4
1-4 Bit Scheme for Black and White Modes..... 1-5
1-5 Bit Scheme for Gray Scale Modes..... 1-6

2-1 Native High Resolution Graphics Modes I/O Map..... 2-2
2-2 Native Screen Start Values (Base 10) For All Native Modes..... 2-4
2-3 Native Control Port Values - Black and White 1280 x 800, Gray Scale 640 x 800 Modes..... 2-5
2-4 Native Screen Start Values (Base 10) - Black and White 1280 x 800, Gray Scale 640 x 800 Modes..... 2-6
2-5 Memory Scheme - Black and White 1280 x 800, Gray Scale 640 x 800 Modes..... 2-7
2-6 Native Control Port Values - Black and White 1280 x 400, Gray Scale 640 x 400 Modes..... 2-7
2-7 Native Screen Start Values (Base 10) - Black and White 1280 x 400, Gray Scale 640 x 400 Modes..... 2-8
2-8 Memory Scheme - Black and White 1280 x 400, Gray Scale 640 x 400 Modes..... 2-8
2-9 Native Control Port Values - Black and White 640 x 400, Gray Scale 320 x 400 Modes..... 2-9
2-10 Native Screen Start Values (Base 10) - Black and White 640 x 400, Gray Scale 320 x 400 Modes..... 2-9
2-11 Memory Scheme - Black and White 640 x 400, Gray Scale 320 x 400 Modes..... 2-10
2-12 Display Pages - Black and White 640 x 400, Gray Scale 320 x 400 Modes..... 2-10

3-1 CRT Control Port 1 - Monochrome Emulation Values..... 3-3
3-2 6845 Registers - Monochrome Emulation..... 3-5
3-3 Character Attributes - Monochrome Emulation..... 3-6

4-1 Mode Control Register - Color/Graphics Emulation Values..... 4-3
4-2 6845 Registers - Color/Graphics Emulation..... 4-5
4-3 Character Attributes - Color/Graphics Emulation..... 4-7
4-4 Memory Scheme - Graphics Modes..... 4-8

5-1 AL Values For IBM Interrupt 10H..... 5-1

6-1 Character ROM Example..... 6-3

1 PROGRAMMING INTRODUCTION

Display Modes..... 1-2

Compatible Devices..... 1-3

I/O Ports..... 1-4

Display Memory..... 1-4

Pixel Displays..... 1-5

DISPLAY MODES

The High-Resolution Display Adapter can operate in a number of different display modes. The Display Adapter is compatible with both the IBM Monochrome and Color/Graphics Display Adapters, and provides monochrome and color/graphics emulation modes to work with most applications for the IBM PC, IBM XT, IBM AT, or compatibles.

In addition, the adapter works with the monitor to provide six native high-resolution graphics modes. You can write programs for those modes which create exceptionally detailed displays.

The monitor runs at all times at 1280 x 800 video dots. Each pixel is composed of one or more video dots. The lower resolution modes are done internally by doubling or quadrupling pixels.

A summary of the available display modes is given in Table 1-1.

Table 1-1 Available Display Modes

Display Mode	Alpha Cols x Rows	Graphics Horz x Vert Pixels
IBM Emulation Modes		
IBM Monochrome	80 x 25	
IBM Color/Graphics	40 x 25	
IBM Color/Graphics	80 x 25	
IBM Color/Graphics		320 x 200
IBM Color/Graphics		640 x 200

Table 1-1 Continued

Display Mode	Alpha Cols x Rows	Graphics Horz x Vert Pixels
Native Graphic Modes		
Gray Scale		320 x 400
Gray Scale		640 x 400
Gray Scale		640 x 800
Black and White		640 x 400
Black and White		1280 x 400
Black and White		1280 x 800
Native Alpha Modes Supported By Extended Bios		
Black and White	80 x 25	
Black and White	80 x 50	
Black and White	160 x 25	
Black and White	160 x 50	

A program can switch from one display mode to another at any time; the adapter operates in the mode that was selected last.

COMPATIBLE DEVICES

Mice, digitizing pads, or other similar devices will work with the adapter if they are hooked up correctly to a standard serial port (a serial port is not included on the adapter). Light pens, however, are not supported.

I/O PORTS

The display adapter has three sets of I/O ports: IBM monochrome emulation ports, IBM color/graphics emulation ports, and native high-resolution ports. The addresses of these ports are listed in Table 1-2.

Table 1-2 I/O Port Map

I/O Address	Function	Type
3B0H-3BFH	IBM Monochrome Ports	Read/Write
3D0H-3DCH	IBM Color/Graphics Ports	Read/Write
3DDH-3DFH	Native High Resolution Ports	Write Only

DISPLAY MEMORY

The display adapter responds to any of the three ranges of memory addresses shown in Table 1-3.

Table 1-3 Memory Map

Memory Address	Function
A0000H - AFFFFH	Native High-Resolution Display Memory
B0000H - B3FFFH	IBM Monochrome Display Memory
B8000H - BBFFFH	IBM Color/Graphics Display Memory

The IBM memory ranges are always active (unless disabled with jumpers - see the User's Guide), but the native memory range is active only when one of the native modes is selected.

Note--The adapter neither initializes nor preserves display memory when changing display modes. Therefore, your program must reinitialize the display memory every time it selects a new mode.

Also note that the same physical memory is used for all of the modes of the display adapter. Therefore, do not write to monochrome or color/graphics display memory while in another display mode, unless you immediately reprogram the I/O registers for the new display mode.

PIXEL DISPLAYS

When the display adapter is in a black-and-white graphics mode, a bit mask can set any pixel on the screen as either ON or OFF. Table 1-4 shows how the eight bits of each byte for these modes are displayed as eight consecutive pixels, with the most significant bit appearing on the left and the least significant bit on the right.

Table 1-4 Bit Scheme for Black and White Modes

Bit Mask	Pixel Displayed
x0000000B	Left-most
0x000000B	
00x00000B	
000x0000B	
0000x000B	
00000x00B	
000000x0B	
0000000xB	Right-most

where x = 0, pixel is off (black)
1, pixel is normal intensity white

When the display adapter is in a graphics mode which uses a gray scale, the horizontal resolution for the screen is effectively halved, since the bit controlling the intensity of the pixel must be included in the bit mask.

Table 1-5 shows how the eight bits of each byte for gray scale modes are displayed as four consecutive pixels, with the most significant bits appearing on the left and the least significant bits on the right.

Table 1-5 Bit Scheme for Gray Scale Modes

Bit Mask	Pixel Displayed
xx000000B	Left-most
00xx0000B	
0000xx00B	
000000xxB	Right-most

where xx = 00, pixel is off (black)
01, pixel is half-intensity white
10, pixel is normal intensity white
11, pixel is high-intensity white

2 PROGRAMMING NATIVE HIGH-RESOLUTION GRAPHICS MODES

Selecting a Native High-Resolution Graphics Mode..... 2-2
Writing to the Native Control Port..... 2-3
Initializing the Native Screen Start Ports..... 2-4

Programming Native B/W 1280 x 800 Mode or Gray Scale 640 x 800 Mode..... 2-5
The Modes..... 2-5
The Memory Scheme..... 2-6

Programming Native B/W 1280 x 400 Mode or Gray Scale 640 x 400 Mode..... 2-7
The Modes..... 2-7
The Memory Scheme..... 2-8

Programmimg Native B/W 640 x 400 Mode or Gray Scale 320 x 400 Mode..... 2-9
The Modes..... 2-9
The Memory Scheme..... 2-10

Displaying Different Pages..... 2-10

SELECTING A NATIVE HIGH-RESOLUTION GRAPHICS MODE

The display adapter supports six native high-resolution graphics modes, as follows:

Black and White	Gray Scale
1280 x 800	640 x 800
1280 x 400	640 x 400
640 x 400	320 x 400

These modes cannot be disabled through jumpers.

You select and initialize one of the high-resolution graphics modes by instructing your program to:

- o Write a particular value to the Native Control Port.
- o Initialize the Native Screen Start Low and High Ports.

Table 2-1 shows the I/O Map for these ports.

Table 2-1 Native High-Resolution Graphics Modes I/O Map

Address	Function	Type
3DDH	Native Screen Start Low Port	Write Only
3DEH	Native Screen Start High Port	Write Only
3DFH	Native Control Port	Write Only

The following sections provide the values and the details for programming these ports.

Writing to the Native Control Port

The Native Control Port located at address 3DFH selects a native high-resolution graphics mode and enables or disables the display, as shown in Figure 2-1.

Figure 2-1 Native Control Port 3DFH (Write Only) - Native Modes

```
Bit 7   6   5   4   3   2   1   0
  +---+---+---+---+---+---+---+---+
  | 1 | x | x | x | x | 0 | x | x |
  +---+---+---+---+---+---+---+---+
    |   |   |   |   |   |   |   |
    |   +---+---+   |   |   |   +--> Select Read bank*:  0 = Even
    |               |   |   |                            1 = Odd
    |               |   |   |
    |               |   |   +--> Select Write bank*:  0 = Even
    |               |   |                             1 = Odd
    |               |   +--> Reserved, must be 0
    |               |
    |               +--> Enable/Disable Display:  0 = Disable
    |                                             1 = Enable
    |
    +--> Select High-Resolution Mode:
                 000 = B/W  640 x 400     001 = Gray 320 x 400
                 010 = B/W 1280 x 400     011 = Gray 640 x 400
                 100 = B/W 1280 x 800     101 = Gray 640 x 800
                 110 = Reserved           111 = Reserved
    |
  +--> Reserved, must be 1
```

* The Select Bank switches are only valid in B/W 1280 x 800 and Gray Scale 640 x 800 modes. The bank selection is described in more detail in the section describing those modes in this chapter.

When disabling the display, be certain to specify the correct display mode to ensure that all usable display memory is refreshed in the dynamic RAMs.

Initializing the Native Screen Start Ports

The Native Screen Start Ports located at 3DDH (low) and 3DEH (high) determine which scan line is displayed first, and can be used to scroll the display.

When you select the mode, you should initialize these ports to zero. Subsequently, if you want your program to scroll the screen, you can write a value to the low and high ports. Table 2-2 shows how to compute the value to be written from either the scan line number or the memory address.

Table 2-2 Native Screen Start Values (Base 10) For All Native Modes

B/W 1280 x 800 or Gray Scale 640 x 800

Value = ((Scan Line) div 2) * 40
or
Value = Address div 4 * 40

B/W 1280 x 400 or Gray Scale 640 x 400

Value = Scan Line * 40
or
Value = Address div 4

B/W 640 x 400 or Gray Scale 320 x 400

Value = Scan Line * 20
or
Value = Address div 4

You must use separate operations to write the low byte of the 16-bit value to the low port and the high byte to the high port.

Note that the display can start only on even scan lines for B/W 1280 x 800 or Gray Scale 640 x 800 modes.

PROGRAMMING NATIVE B/W 1280 X 800 MODE OR GRAY SCALE 640 X 800 MODE

The Modes

In these modes, all of the 128K bytes of display memory are used to yield either a black and white display with a resolution of 1280 horizontal and 800 vertical pixels, or a gray scale display with a resolution of 640 horizontal and 800 vertical pixels. To select these modes, you write one of the values in Table 2-3 to the native control port (as explained in "Writing to the Native Control Port").

Table 2-3 Native Control Port Values - Black and White 1280 x 800, Gray Scale 640 x 800 Modes

Hex	Binary	Function
C8	11001000	Enable Display B/W 1280 x 800 Mode, Read/Write Even Bank
CB	11001011	Enable Display B/W 1280 x 800 Mode, Read/Write Odd Bank
C0	11000000	Disable Display B/W 1280 x 800 Mode, Read/Write Even Bank
D8	11011000	Enable Display Gray Scale 640 x 800 Mode, Read/Write Even Bank
DB	11011011	Enable Display Gray Scale 640 x 800 Mode, Read/Write Odd Bank
D0	11010000	Disable Display Gray 640 x 800 Mode, Read/Write Even Bank

When you enter this mode, you should also initialize both the native low screen start port (at 3DDH) and the native high screen start port (at 3DEH) to zero. Subsequently, if you want to use those screen start ports to scroll the screen, you can write values to them. Compute the values for the ports as shown in Table 2-4.

Table 2-4 Native Screen Start Values (Base 10) - Black and White 1280 x 800, Gray Scale 640 x 800 Modes

Value = ((Scan Line) div 2) * 40
or
Value = Address div 4 * 40

The Memory Scheme

Since the memory address space for the native display modes is only 64K bytes from A0000H through AFFFFH, the display memory for these modes is divided into two banks. The even bank contains the even scan lines, and the odd bank contains the odd scan lines. There are separate bank select bits in the native control port for reading and writing to make screen-to-screen copying more efficient.

Table 2-5 shows the memory scheme for these modes. Each scan line uses 160 (A0 hex) bytes of display memory. The first byte of each scan line is displayed on the left, and the last byte is displayed on the right.

Table 2-5 Memory Scheme - Black and White 1280 x 800, Gray Scale 640 x 800 Modes

Scan Line	Bank	First Byte	Last Byte
0	0	A0000H	A009FH
1	1	A0000H	A009FH
2	0	A00A0H	A013FH
3	1	A00A0H	A013FH
4	0	A0140H	A01DFH
5	1	A0140H	A01DFH
...	...	...	...
796	0	AF8C0H	AF95FH
797	1	AF8C0H	AF95FH
798	0	AF960H	AF9FFH
799	1	AF960H	AF9FFH

PROGRAMMING NATIVE B/W 1280 X 400 MODE OR GRAY SCALE 640 X 400 MODE

The Modes

These modes provide high-resolution graphics modes contained in a single bank of memory. You select these modes by writing the values in Table 2-6 to the native control port.

Table 2-6 Native Control Port Values - Black and White 1280 x 400, Gray Scale 640 x 400 Modes

Hex	Binary	Function
A8	10101000	Enable Display B/W 1280 x 400 Mode
A0	10100000	Disable Display B/W 1280 x 400 Mode
B8	10111000	Enable Display Gray Scale 640 x 400 Mode
B0	10110000	Disable Display Gray Scale 640 x 400 Mode

When you enter this mode, you should also initialize both the native low screen start port (at 3DDH) and the native high screen start port (at 3DEH) to zero. Subsequently, if you want to use those screen start ports to scroll the screen, you can write values to them. Compute the values for the ports as shown in Table 2-7.

Table 2-7 Native Screen Start Values (Base 10) - Black and White 1280 x 400, Gray Scale 640 x 400 Modes

Value = Scan Line * 40
or
Value = Address div 4

The Memory Scheme

Since only 64K bytes of display memory are needed for these modes, the display memory is contained in a single bank. There are 160 (A0 Hex) bytes of memory for each scan line. The memory scheme for these modes is shown in Table 2-8.

Table 2-8 Memory Scheme - Black and White 1280 x 400, Gray Scale 640 x 400 Modes

Scan Line	Bank	First Byte	Last Byte
0	0	A0000H	A009FH
1	0	A00A0H	A013FH
...	...	...	...
398	0	AF8C0H	AF95FH
399	0	AF960H	AF9FFH

PROGRAMMING NATIVE B/W 640 X 400 MODE OR GRAY SCALE 320 X 400 MODE

The Modes

These modes support two separate pages of display memory, which can be used for animation or fast screen updates. You select these modes by writing the values in Table 2-9 to the native control port.

Table 2-9 Native Control Port Values - Black and White 640 x 400, Gray Scale 320 x 400 Modes

Hex	Binary	Function
88	10001000	Enable Display B/W 640 x 400 Mode
80	10000000	Disable Display B/W 640 x 400 Mode
98	10011000	Enable Display Gray Scale 320 x 400 Mode
90	10010000	Disable Display Gray Scale 320 x 400 Mode

When you enter this mode, you should also initialize both the native low screen start port (at 3DDH) and the native high screen start port (at 3DEH) to zero. Subsequently, if you want to use those screen start ports to scroll the screen, you can write values to them. Compute the values for the ports as shown in Table 2-10.

Table 2-10 Native Screen Start Values (Base 10) - Black and White 640 x 400, Gray Scale 320 x 400 Modes

Value = scan line * 20
or
Value = address div 4

The Memory Scheme

Since these modes require only 32K bytes of display memory, the display memory is completely contained in a single bank.

There are 80 (50 Hex) bytes of memory for each scan line. The memory scheme for these modes is shown in Table 2-11.

Table 2-11 Memory Scheme - Black and White 640 x 400, Gray Scale 320 x 400 Modes

Scan Line	Bank	First Byte	Last Byte
0	0	A0000H	A004FH
1	0	A0050H	A009FH
2	0	A00A0H	A00EFH
...	...	...	...
398	0	A7C60H	A7CAFH
399	0	A7CB0H	A7CFFH

DISPLAYING DIFFERENT PAGES

These modes support two display pages. Both pages are located in the same bank at different addresses. Table 2-12 shows how to write to the native screen start registers to display one of the pages.

Table 2-12 Display Pages - Black and White 640 x 400, Gray Scale 320 x 400 Modes

Memory Range	Bank	Start High	Start Low
A0000H - A7CFFH	0	00	00
A8000H - AFCFFH	0	20	00

3 PROGRAMMING IBM MONOCHROME EMULATION MODE

Selecting This Mode..... 3-2

Writing to CRT Control Port 1..... 3-2

Initializing the 6845 CRT Controller Registers..... 3-4

Programming Display Memory..... 3-5

SELECTING THIS MODE

When this mode is selected, the display adapter emulates the IBM Monochrome Display Adapter.

Note--If the MONO jumper is set to the OFF position, the card will not respond to any monochrome I/O or memory accesses.

The adapter also supports four memory pages of 80 x 25 characters, an enhancement over the IBM Monochrome Display Adapter, which supports only a single memory page.

Note--If you write a program which uses more than one page of memory, the program will not run on a standard IBM monochrome display.

You select this mode by

- o Writing to CRT Control Port 1.
- o Initializing the 6845 CRT Controller Registers R0-R15.

You may write to these ports in any order.

WRITING TO CRT CONTROL PORT 1

CRT Control Port 1, located at address 3B8H, selects IBM monochrome emulation mode and enables or disables the display, as shown in Figure 3-1.

Figure 3-1 CRT Control Port 1 3B8H (Write Only) - Monochrome Emulation

```
Bit  7   6   5   4   3   2   1   0
   +---+---+---+---+---+---+---+---+
   | X | X | x | X | x | X | X | X |
   +---+---+---+---+---+---+---+---+
     |   |   |   |   |   |   |   |
     |   |   |   |   |   |   |   +--> High-Resolution Mode
     |   |   |   |   |   |   |                (ignored).
     |   |   |   |   |   |   +--> Not used.
     |   |   |   |   |   +--> Not used.
     |   |   |   |   |
     |   |   |   |   +--> Enable/Disable Display:  0 = Disable
     |   |   |   |                                 1 = Enable
     |   |   |   +--> Not used.
     |   |   |
     |   |   +--> Indicates Character Attribute, Bit 7 is:
     |   |            0 = High-Intensity
     |   |            1 = Blinking
     |   |
     |   +--> Not used.
     +--> Not used.
```

To select the mode and enable or disable the display, you write one of the values in Table 3-1 to CRT Control Port 1.

Table 3-1 CRT Control Port 1 - Monochrome Emulation Values

Hex	Binary	Function
29	00101001	Select 80 x 25 Alphanumeric
21	00100001	Disable Display

You may also check display controller status by reading the CRT status port at 3BAH, as shown in Figure 3-2.

Figure 3-2 CRT Status Port 3BAH (Read Only) - Monochrome Emulation

```
Bit  3   2   1   0
     +---+---+---+---+
     | x | 0 | 0 | x |
     +---+---+---+---+
       |   |   |   |
       |   |   |   +--> Horizontal Sync:  0 = Not Active
       |   |   |                          1 = Active
       |   |   +--> Reserved
       |   |
       |   +--> Reserved
       |
       +--> Black/White Video Dot Stream
```

INITIALIZING THE 6845 CRT CONTROLLER REGISTERS

To ensure that monochrome emulation mode operates normally, you must initialize registers R0-R15 of the 6845 CRT Controller. Initialize the registers by

1. Writing the register number to the 6845 Index Register (3B4H).
2. Writing the register value to the 6845 Data Register (3B5H).

Table 3-2 shows the values to properly initialize these registers.

Table 3-2 6845 Registers - Monochrome Emulation

Register	Function	Type	Value
R0	Horizontal Total	Write Only	61H
R1	Horizontal Displayed	Write Only	50H
R2	Horizontal Sync Position	Write Only	52H
R3	Horizontal Sync Width	Write Only	0FH
R4	Vertical Total	Write Only	19H
R5	Vertical Total Adjust	Write Only	06H
R6	Vertical Displayed	Write Only	19H
R7	Vertical Sync Position	Write Only	19H
R8	Interlace Mode	Write Only	02H
R9	Maximum Scan Line	Write Only	0DH
R10	Cursor Start	Write Only	0BH
R11	Cursor End	Write Only	0CH
R12	Start Address (H)	Read/Write	0
R13	Start Address (L)	Read/Write	0
R14	Cursor (H)	Read/Write	0
R15	Cursor (L)	Read/Write	0

PROGRAMMING DISPLAY MEMORY

In IBM Monochrome Emulation Mode, there are 16K bytes of display memory located at addresses B0000H-B3FFFH. This display memory supports four screens organized as 80 columns by 25 rows. Each character is represented by one byte for the character code followed by one byte for the attribute, with the character codes at even addresses and the attributes at odd addresses.

The Display Adapter supports 256 different characters contained in ROM. The attribute for each character is contained in the byte following the character. The attributes are shown in Table 3-3.

Table 3-3 Character Attributes - Monochrome Emulation

Hex	Binary	Attributes
00	00000000	Non-Display
01	00000001	Underline
07	00000111	Normal
70	01110000	Reverse Video
09	00001001	Underline, High Intensity
81	10000001	Underline, Blinking
89	10001001	Underline, High Intensity, Blinking
0F	00001111	Normal, High Intensity
87	10000111	Normal, Blinking
8F	10001111	Normal, High Intensity, Blinking
F0	11110000	Reverse Video, Blinking

The monochrome display memory can always be read or written (unless disabled by the MONO jumper), even while the native display adapter is in another mode. Unlike I/O ports, however, the act of reading or writing display memory does not change the state of the screen. This allows programs to clear display memory before reprogramming the I/O registers for a new display mode.

Caution--The same physical memory is used for all of the modes of the display adapter. Therefore, do not write to color/graphics display memory while in monochrome emulation mode, unless you immediately reprogram the I/O registers for the new display mode.

4 PROGRAMMING IBM COLOR/GRAPHICS EMULATION MODES

Selecting These Modes..... 4-2

Writing to the Mode Control Register..... 4-2

Initializing the 6845 CRT Controller Registers..... 4-5

Programming the Display Memory..... 4-6
Alphanumeric Modes..... 4-6
Graphics Modes..... 4-7

SELECTING THESE MODES

When any of these modes are selected, the display adapter emulates the IBM Color/Graphics Display Adapter.

Note--If the COLOR jumper on the display adapter is set to the OFF position, the monitor will not respond to any color/graphics I/O or memory accesses.

You select one of these color/graphics modes by instructing your program to

- Write to the Mode Control Register of the color/graphics I/O area.
- Initialize Registers R0-R15 of the 6845 CRT Controller.

You may write to these ports in any order. The details of these write operations are detailed in the following sections.

Caution--If a program reads or writes color/graphics registers while in the monochrome or native modes, the screen is left in an undefined state until the color/graphics registers have been completely re-initialized.

WRITING TO THE MODE CONTROL REGISTER

The Mode Control Register, located at address 3D8H, selects the IBM color/graphics emulation mode and enables or disables the display, as shown in Figure 4-1.

Figure 4-1 Mode Control Register 3D8H (Write Only) - Color/Graphics Emulation

```
Bit  7   6   5   4   3   2   1   0
   +---+---+---+---+---+---+---+---+
   | x | x | x | x | x | x | x | x |
   +---+---+---+---+---+---+---+---+
     |   |   |   |   |   |   |   |
     |   |   |   |   |   |   |   +--> Select Graphics or 40- or
     |   |   |   |   |   |   |        80-column Alphanumeric:
     |   |   |   |   |   |   |          0 = Graphics or
     |   |   |   |   |   |   |               40-column alphanumeric
     |   |   |   |   |   |   |          1 = 80-column alphanumeric
     |   |   |   |   |   |   |
     |   |   |   |   |   |   +--> Select Alphanumeric/Graphics:
     |   |   |   |   |   |            0 = Alphanumeric
     |   |   |   |   |   |            1 = Graphics
     |   |   |   |   |   |
     |   |   |   |   |   +--> Ignored
     |   |   |   |   |
     |   |   |   |   +--> Enable/Disable Display:  0 = Disable
     |   |   |   |                                 1 = Enable
     |   |   |   +--> Select Alphanumeric/Graphics:
     |   |   |          0 = Alphanumeric or 320 x 200 Graphics
     |   |   |          1 = 640 x 200 Black and White Graphics
     |   |   |
     |   |   +--> Set Bit 7 of Character Attribute:
     |   |            0 = High-Intensity
     |   |            1 = Blinking
     |   |
     |   +--> Not used
     |
     +--> Not used
```

To select the mode and enable or disable the display, you write one of the values in Table 4-1 to the Mode Control Register.

Table 4-1 Mode Control Register - Color/Graphics Emulation Values

Hex	Binary	Function
2C	00101100	Select 40 x 25 Alphanumeric
24	00100100	Disable Display 40 x 25 Alphanumeric
2D	00101101	Select 80 x 25 Alphanumeric
25	00100101	Disable Display 80 x 25 Alphanumeric
0E	00001110	Select 320 x 200 Graphics
06	00000110	Disable Display 320 x 200 Graphics
1E	00011110	Select 640 x 200 Graphics
16	00010110	Disable Display 640 x 200 Graphics

You may also check the status of the display controller by reading the CRT status port at 3DAH, as shown in Figure 4-2.

Figure 4-2 Status Register 3DAH (Read Only) - Color/Graphics Emulation

```
Bit  3   2   1   0
    +---+---+---+---+
    | x | 1 | 0 | x |
    +---+---+---+---+
      |   |   |   |
      |   |   |   +--> Enable/Disable Display:  0 = Disable
      |   |   |                                 1 = Enable
      |   |   +--> Light-Pen Trigger*
      |   |
      |   +--> Light-Pen Switch*
      |
      +--> Vertical Sync:  0 = Not Active
                           1 = Active
```

*Since a light-pen is not supported, bits 1 and 2 of the Status Register are always constant.

INITIALIZING THE 6845 CRT CONTROLLER REGISTERS

To ensure that color/graphics modes operate normally, you must initialize registers R0-R15 of the 6845 CRT Controller. Initialize the registers by

1. Writing the register number to the 6845 Index Register (3D4H).
2. Writing the register value to the 6845 Data Register (3D5H).

Table 4-2 shows the values to properly initialize these registers.

Table 4-2 6845 Registers - Color/Graphics Emulation

Reg.	Function	Type	40x25 Alpha	80x25 Alpha	Graphic Modes
R0	Horizontal Total	Write Only	38H	71H	38H
R1	Horizontal Displayed	Write Only	28H	50H	28H
R2	Horizontal Sync Position	Write Only	2DH	5AH	2DH
R3	Horizontal Sync Width	Write Only	0AH	0AH	0AH
R4	Vertical Total	Write Only	1FH	1FH	7FH
R5	Vertical Total Adjust	Write Only	06H	06H	06H
R6	Vertical Displayed	Write Only	19H	19H	64H
R7	Vertical Sync Position	Write Only	1CH	1CH	70H
R8	Interlace Mode	Write Only	02H	02H	02H
R9	Maximum Scan Line	Write Only	07H	07H	01H
R10	Cursor Start	Write Only	06H	06H	06H
R11	Cursor End	Write Only	07H	07H	07H
R12	Start Address (H)	Read/Write	0	0	0
R13	Start Address (L)	Read/Write	0	0	0
R14	Cursor (H)	Read/Write	0	0	0
R15	Cursor (L)	Read/Write	0	0	0

PROGRAMMING THE DISPLAY MEMORY

In the Color/Graphics Emulation Modes, 16K bytes of display memory are located at addresses B8000H-BBFFFH. This memory is used for any display mode selected by the Mode Control Register.

The color/graphics display memory can always be read or written (unless disabled by the COLOR jumper), even while the display adapter is in another mode. Unlike I/O ports, however, reading from or writing to display memory does not change the state of the screen. This allows programs to clear display memory before reprogramming the I/O registers for a new display mode.

Caution--The same physical memory is used for all of the modes of the display adapter. Therefore, do not write to monochrome memory when in color/graphics emulation mode, unless you immediately reprogram the I/O registers for the new display mode.

Alphanumeric Modes

The display memory in the alphanumeric modes supports either four screens of 80 columns by 25 rows, or eight screens of 40 columns by 25 rows. Any of the alphanumeric screens can be displayed by programming the 6845 Screen Start Registers.

The display adapter supports 256 different characters contained in ROM. The characters are organized the same as in Monochrome Emulation Mode, with each character represented by one byte at an even address for the character code and one byte at the following odd address for the attribute.

The codes for the attributes are shown in Table 4-3.

Table 4-3 Character Attributes - Color/Graphics Emulation

Hex	Binary	Attributes
00	00000000	Non-Display
07	00000111	Normal
70	01110000	Reverse Video
08	00001000	Normal, Low Intensity
0F	00001111	Normal, High Intensity
87	10000111	Normal, Blinking
88	10001000	Normal, Low Intensity, Blinking
8F	10001111	Normal, High Intensity, Blinking
F0	11110000	Reverse Video, Blinking

Note that the attributes for alphanumeric Color/Graphics Modes are the same as Monochrome Mode, except that there is a low-intensity attribute instead of an underline attribute.

Graphics Modes

The display memory in the IBM graphics emulation modes supports a single graphics screen with either of two resolutions: 640 by 200 or 320 by 200. The 160 by 100 low-resolution graphics mode of the IBM Color/Graphics Display Adapter is not supported.

Table 4-4 shows the memory scheme for the graphics modes.

Table 4-4 Memory Scheme - Graphics Modes

Scan Line	First Byte	Last Byte
0	B8000H	B804FH
1	BA000H	BA04FH
2	B8050H	B809FH
3	BA050H	BA09FH
4	B80A0H	B80EFH
5	BA0A0H	BA0EFH
...	...	...
196	B9EA0H	B9EEFH
197	BBEA0H	BBEEFH
198	B9EF0H	B9F3FH
199	BBEF0H	BBF3FH

Note that the even and odd scan lines are divided into separate banks of memory, with even scan lines from B8000H through B9F3FH, and odd scan lines from BA000H through BBF3FH. Each scan line uses 80 (50 hex) bytes of display memory, with the first byte of each scan line displayed on the left, and the last byte displayed on the right.

5 ACCESSING THE EXTENDED BIOS

The extended alphanumeric modes may be selected with the "set mode" function of IBM interrupt 10h. When you employ that function and set AH = 0, AL determines the modes as shown in Table 5-1.

Table 5-1 AL Values For IBM Interrupt 10H

AL Value	Mode
AL = 0	40 X 25 BW ALPHA
1	40 X 25 COLOR ALPHA
2	80 X 25 BW ALPHA
3	80 X 25 COLOR ALPHA
4	320 X 200 COLOR GRAPHICS
5	320 X 200 BW GRAPHICS
6	640 X 200 BW GRAPHICS
7	80 X 25 MONOCHROME ALPHA
AL = C0H	80 X 25 ALPHA
C1H	80 X 50 ALPHA
C2H	160 X 25 ALPHA
C3H	160 X 50 ALPHA

Note--The extended screen driver must be loaded by a SCREEN command with a LOAD parameter (see the User's Guide) before the extended BIOS can be accessed.

You can also set AH = 0FH to employ the "return mode" of IBM interrupt 10h, and then examine AL to find out which display mode is currently selected. The values for the modes are the same as for set mode, and are shown in Table 5-1.

6 CUSTOMIZING THE ROM CHARACTER SETS

Standard Character Set..... 6-2

Custom Character Sets..... 6-2

STANDARD CHARACTER SET

The characters displayed in the alphanumeric modes are defined in a 16 by 16 character cell. These cells are stored in two ROMs on the display adapter. Each of the 16 character lines of each cell are doubled on the display, yielding a physical character cell size of 16 by 32. The standard character set supplied with the display adapter includes all 256 standard IBM characters.

CUSTOM CHARACTER SETS

Custom character sets may be generated by substituting custom ROMs for the standard ROM set. Either one or two character sets may be stored in the character ROMs. If only one character set is required, 250 nanosecond 2732 ROMs may be used. If you want two character sets, you must use 250 nanosecond 2764-type ROMs.

The two possible character sets are called the "primary" and "alternate" fonts, and are stored at the following ROM addresses:

Primary Font	0-0FFFH
Alternate Font	1000H-1FFFH

The font is selected with the FONT utility, as described in the User's Guide.

You define the character sets on custom ROMs by storing the left half (left-most eight pixels) of each character in the ROM marked "CHARL" at the IC location labeled "LEFT", and the right half of the character in the ROM marked "CHARR" at the IC location labeled "RIGHT".

The 16 character lines of the first character are stored in the first 16 bytes of each ROM, and the other 255 characters follow sequentially.

Note--Only 16 character lines are stored in ROM, since each line is doubled to give the 32 scan lines of the physical character cell.

You calculate the starting ROM address by multiplying the character code by 10H and adding the starting address of the appropriate font. For example, the starting address for the letter 'B' is

	Primary Font	Alternate Font
Character Code for 'B'	42H	42H
	* 10H	* 10H
	---	---
	420H	420H
Starting Address of Font	+ 0H	+ 1000H
	---	---
Starting ROM Address	420H	1420H

Table 6-1 shows how a custom 'B' could be constructed for the primary font.

Table 6-1 Character ROM Example

Pattern	Address	CHARL	CHARR
....	0420H	00H	00H
....	0421H	00H	00H
..xxxxxx xxxxx...	0422H	3FH	F8H
....xxxx ..xxxx..	0423H	0FH	3CH
....xxxx ...xxxx.	0424H	0FH	1EH
....xxxx ...xxxx.	0425H	0FH	1EH
....xxxx ..xxxx..	0426H	0FH	3CH
....xxxx xxxxx...	0427H	0FH	F8H

Table 6-1 Continued

Pattern	Address	CHARL	CHARR
....xxxx ..xxxx..	0428H	0FH	3CH
....xxxx ...xxxx.	0429H	0FH	1EH
....xxxx ...xxxx.	042AH	0FH	1EH
....xxxx ..xxxx..	042BH	0FH	3CH
..xxxxxx xxxxx...	042CH	3FH	F8H
....	042DH	00H	00H
....	042EH	00H	00H
....	042FH	00H	00H

INDEX

A

Addresses
- character sets, 6-2
- color/graphics emulation display memory, 4-6
- CRT Control Port 1, 3-2
- CRT Controller Registers - color/graphics modes, 4-5
- CRT Controller Registers - monochrome emulation mode, 3-4
- CRT status port, 3-3, 4-4
- display memory, 1-4
- display pages in black and white 640 x 400 mode, 2-10
- display pages in gray scale 320 x 400 mode, 2-10
- fonts, 6-2
- I/O ports, 1-4
- Mode Control Register, 4-2
- monochrome emulation display memory, 3-5
- native control port, 2-2
- native screen start ports, 2-2
- starting ROM for a character, 6-3

Attributes
- values for color/graphics emulation, 4-7
- values for monochrome emulation, 3-6

B

Banks of memory, 2-6

Bit scheme
- black and white modes, 1-5
- gray scale modes, 1-6

Bit schemes, 1-5

C

Characters
- attributes for color/graphics emulation, 4-7
- attributes for monochrome emulation, 3-6
- cell size, 6-2
- custom character set, 6-2
- ROM addresses, 6-2
- sustom example, 6-3

COLOR jumper, 4-2, 4-6

Compatibility
- devices and, 1-3
- IBM Display Adapters, 1-2

Constructing a custom
character, 6-3
CRT Control Port 1
values for monochrome
emulation, 3-3
CRT Controller Registers
values for color/graphics
emulation, 4-5
values for monochrome
emulation, 3-5
CRT status port, 3-3

D
Display memory, 1-4
color/graphics emulation,
4-6
monochrome emulation, 3-5
pages, 2-9
Display modes, 1-2

G
Gray scales, 1-5

I
I/O ports, 1-4
Interrupt 10H, 5-1

M
Memory addresses, 1-4
Memory pages, 3-2
Memory scheme
black and white 1280 x
400 mode, 2-8
black and white 1280 x
800 mode, 2-7
black and white 640 x 400
mode, 2-10
Memory scheme (continued)
gray scale 320 x 400 mode,
2-10
gray scale 640 x 400 mode,
2-8
gray scale 640 x 800 mode,
2-7
IBM graphics modes
emulation, 4-8
Mode Control Register
values for color/graphics
emulation, 4-4
MONO jumper, 3-2, 3-6

N
Native control port
values for black and white
1280 x 400 mode, 2-7
values for black and white
1280 x 800 mode, 2-5
values for black and white
640 x 400 mode, 2-9
values for gray scale
320 x 400 mode, 2-9
values for gray scale
640 x 400 mode, 2-7
values for gray scale
640 x 800 mode, 2-5
Native control ports
native graphics modes, 2-2
Native screen start ports
native graphics modes, 2-2
Native screen start values
black and white 1280 x
400 mode, 2-8
black and white 1280 x
800 mode, 2-6

Native screen start values
(continued)
black and white 640 x 400
mode, 2-9
gray scale 320 x 400 mode,
2-9
gray scale 640 x 400 mode,
2-8
gray scale 640 x 800 mode,
2-6

P

Pages in memory, 3-2
Physical memory, 1-4, 3-6,
4-6
Pixel displays, 1-5

S

Scan lines, 4-8
SCREEN command
extended BIOS and, 5-1
Scrolling the display, 2-4

FCC NOTICE

WARNING: This equipment generates, uses, and can radiate radio frequency energy and if not installed and used in accordance with the instruction manual, may cause interference to radio communications. It has been tested and and found to comply with the limits for a Class A computing device pursuant to Subpart J of Part 15 of FCC Rules, which are designed to provide reasonable protection against such interference when operating in a commercial environment. Operation of this equipment in a residential area is likely to cause interference in which case the user at his own expense will be required to take whatever measures may be required to correct the interference.

Only devices certified to comply with the limits for a Class A computing device may be attached to this equipment. Operation with non-certified device(s) is likely to result in interference to radio and TV reception.

This equipment is intended for commercial use only and is not suited for operation in class B environments.

The use of shielded I/O cables is required when connecting this equipment to any and all optional peripheral or host devices. Failure to do so may violate FCC rules.

880179-02 Rev. A
December 1985
Printed in Taiwan, R.O.C.

Wyse Technology
3571 North First Street
San Jose, CA 95134

WYSE